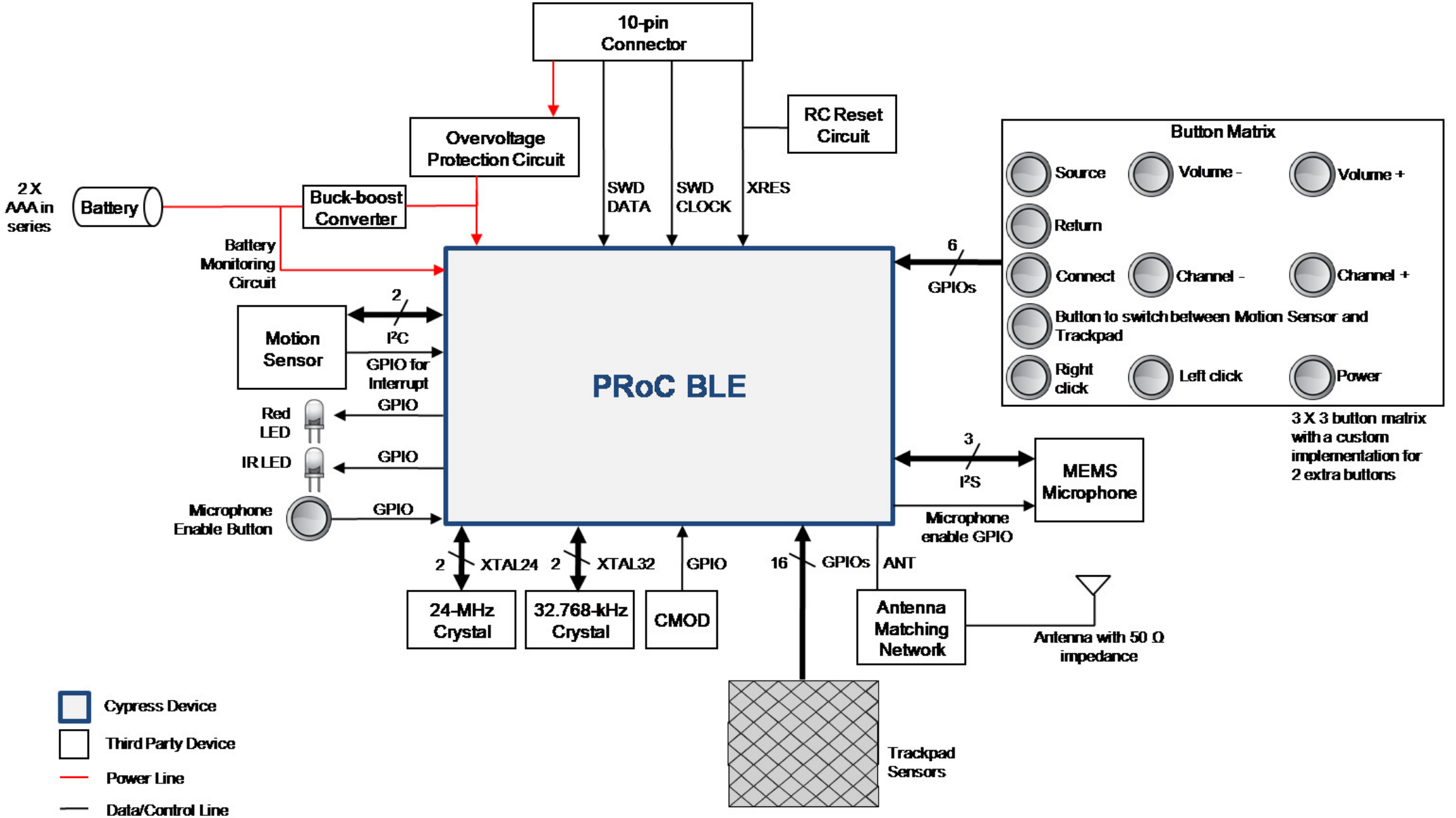

CYPRESS SEMICONDUCTOR © 2014			
Title	CY5672 Remote Control RDK		
Size B	Document Number 630-60199-01		Rev 2.1
Date: Tuesday, December 09, 2014	Sheet 1 of 6		

POWER SUPPLY

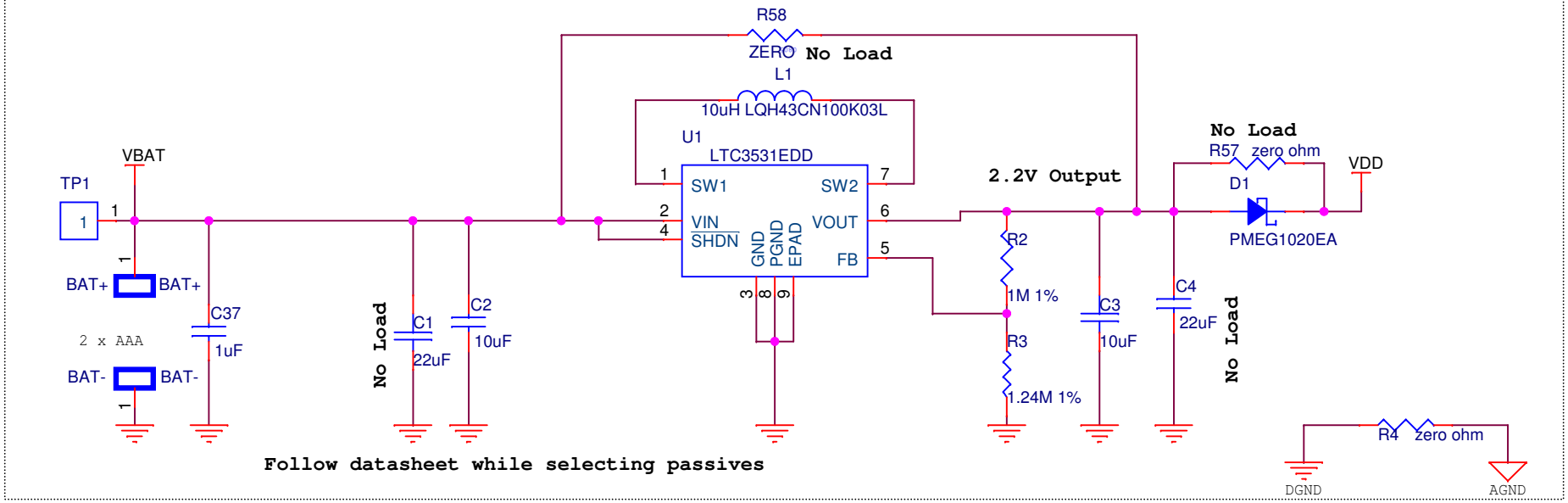

Follow datasheet while selecting passives

PRoC BLE CURRENT CONSUMPTION MEASUREMENT

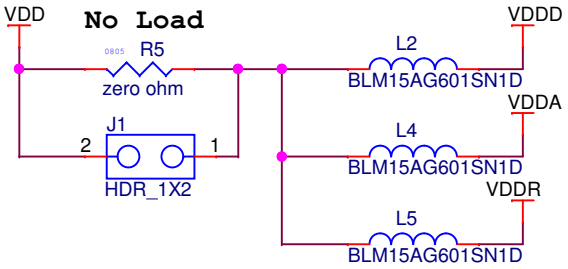

PERIPHERALS CURRENT MEASUREMENT

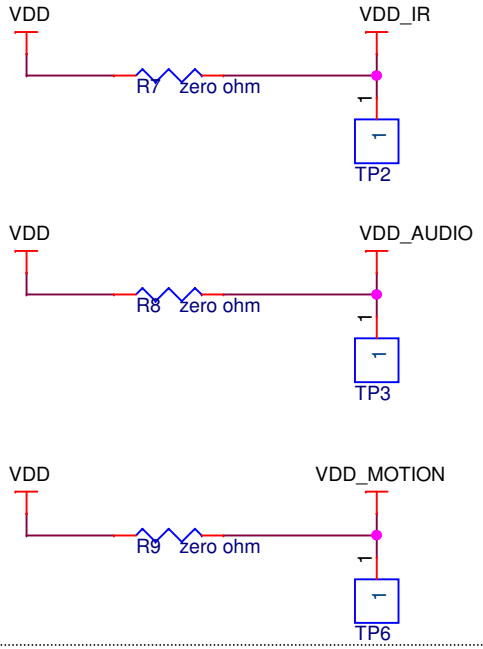

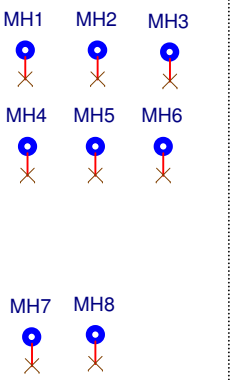

Test points for system power

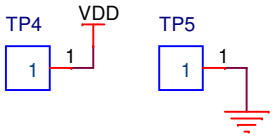

CYPRESS SEMICONDUCTOR © 2014		
Title: CY5672 Remote Control RDK		
Size: A	Document Number: 630-60199-01	Rev: 2.1
Date: Tuesday, December 09, 2014	Sheet 2 of 6	

PRoC BLE Device Connections

KHz Crystals

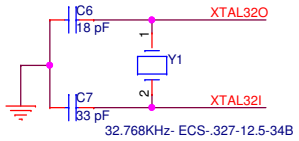

MHz Crystals

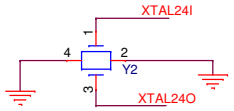

Series Resistor for Trackpad lines

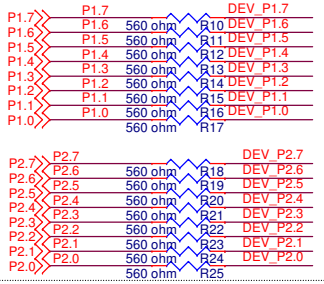

Over voltage protection from VTARG MiniProg3

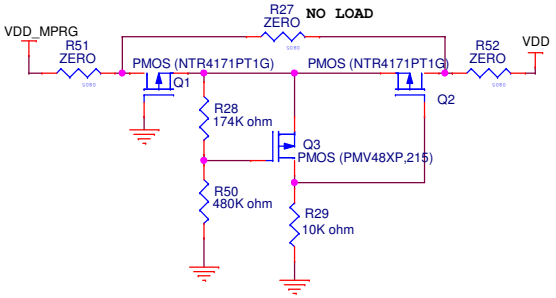

50 Ohm Wiggle Antenna

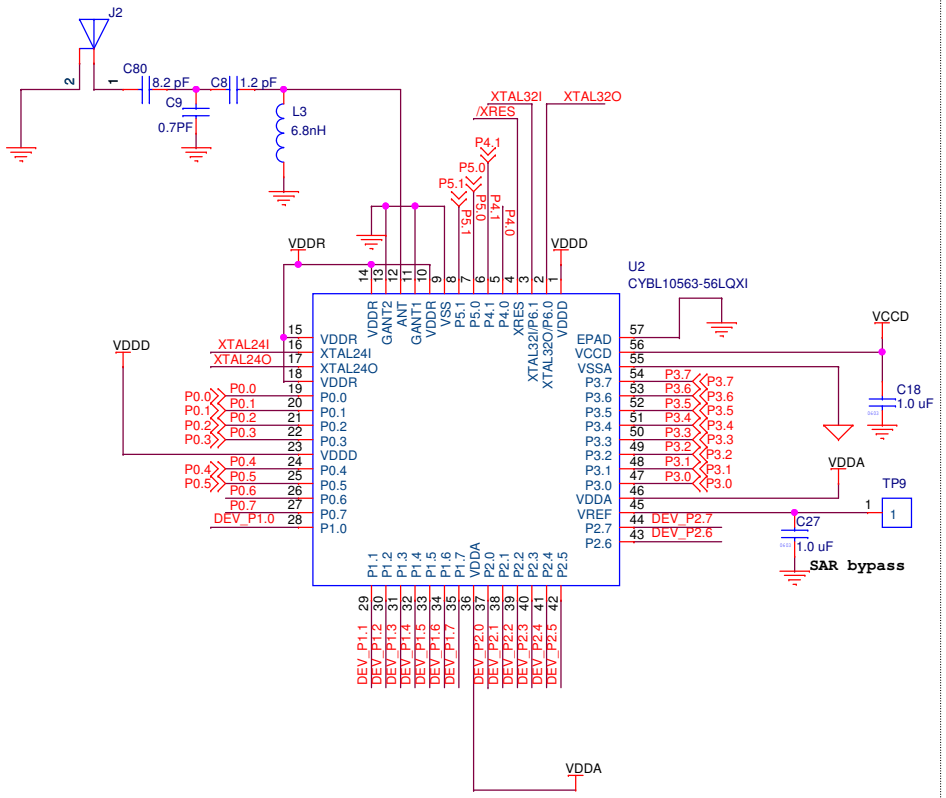

SWD DEBUG HEADER

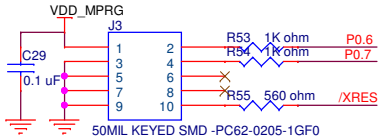

P0.6 - SWD DATA(SWDIO)
P0.7 - SWD CLK

CMOD Capacitor

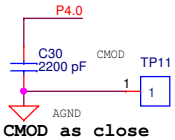

Place CMOD as close to IC Pin as possible

Test points for PRoC BLE device Power

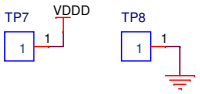

Place all decaps as close to pin as possible

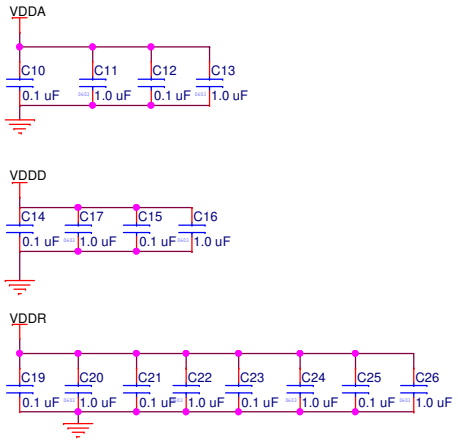

Power on Reset Circuit

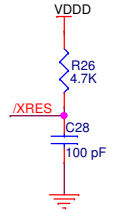

CYPRESS SEMICONDUCTOR © 2014		
Title: CY5672 Remote Control RDK		
Size: B	Document Number: 630-60199-01	Rev: 2.1
Date: Monday, December 29, 2014	Sheet 3 of 6	

IR LED

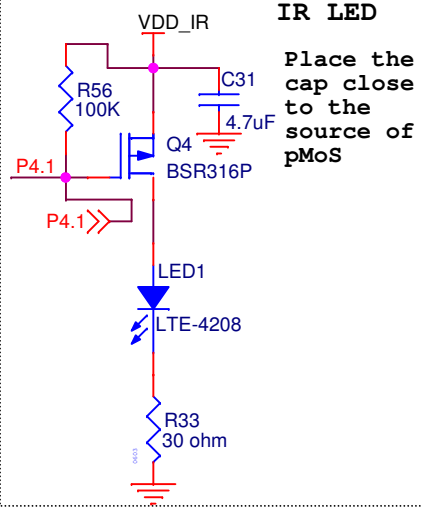

Place the cap close to the source of pMoS

BATTERY MONITORING AND VOICE ENABLE BUTTON

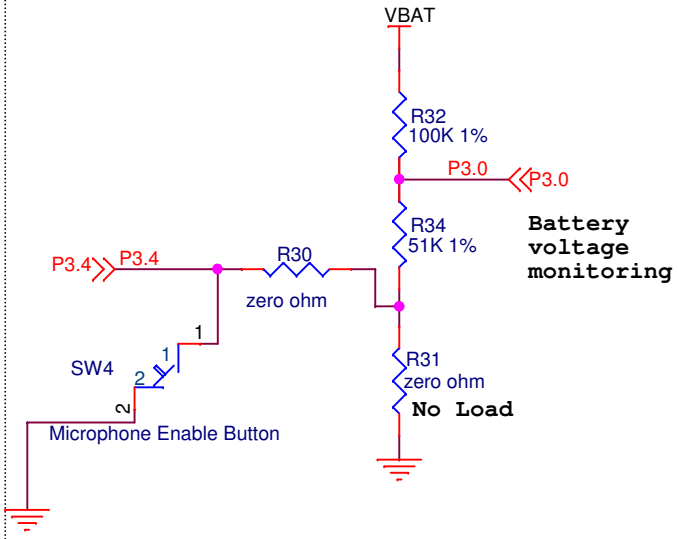

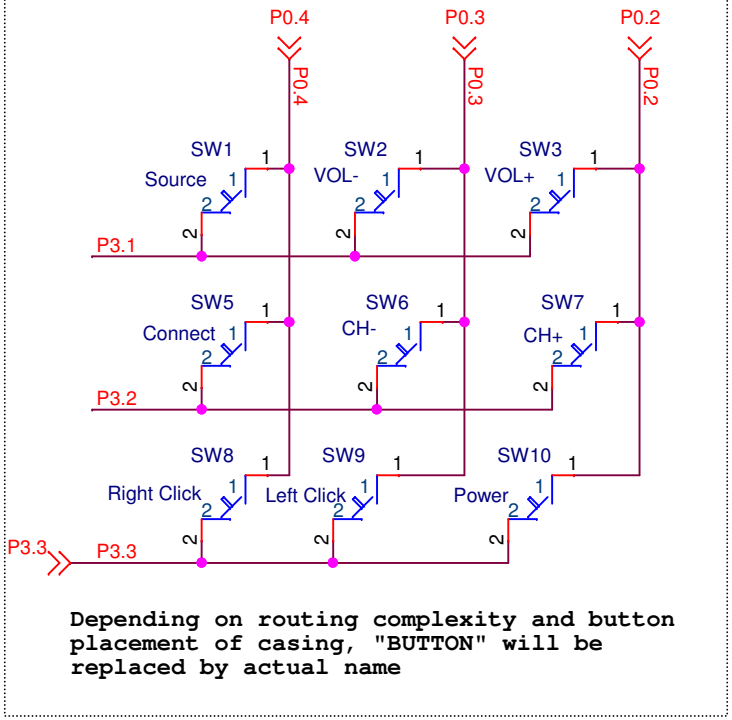

Depending on routing complexity and button placement of casing, "BUTTON" will be replaced by actual name

STATUS LED : RED

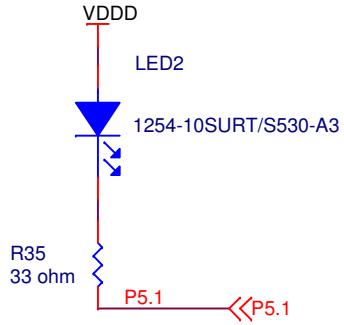

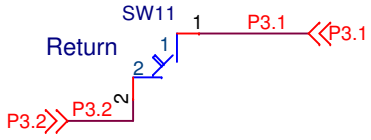

Connector to interface Trackpad Module

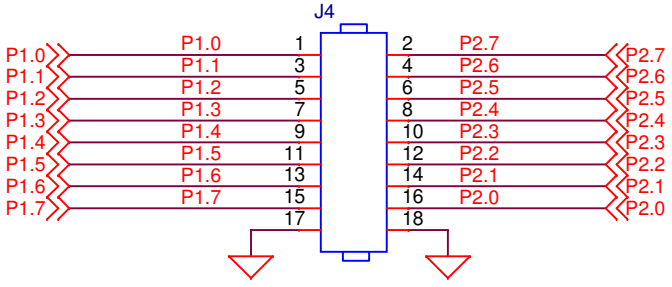

CYPRESS SEMICONDUCTOR © 2014		
Title: **CY5672 Remote Control RDK**		
Size: Custom	Document Number: **630-60199-01**	Rev: 2.1
Date: Tuesday, December 09, 2014	Sheet 4 of 6	

AUDIO INPUT DEVICE

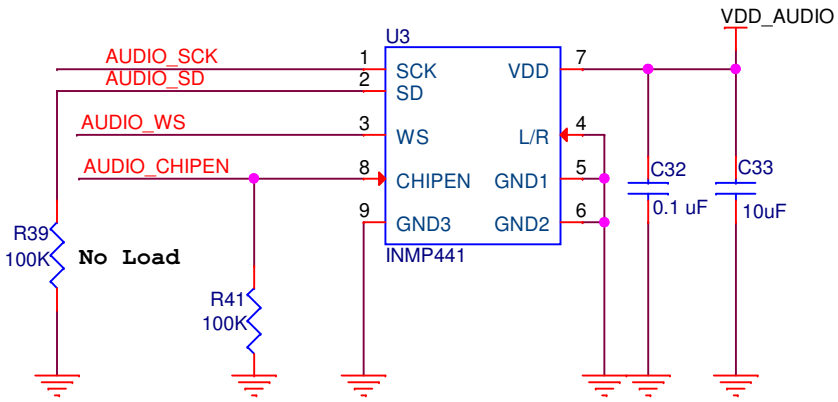

Follow decap layout considerations as per datasheet

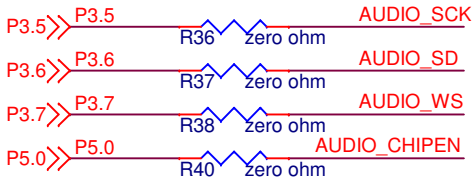

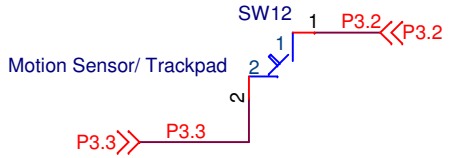

Motion sensor/ Trackpad button is included to switch between motion sensor and trackpad functionality

MOTION SENSOR

AD Status & I2C Address
AD0 =0 -> b1101000
AD0 =1 -> b1101001

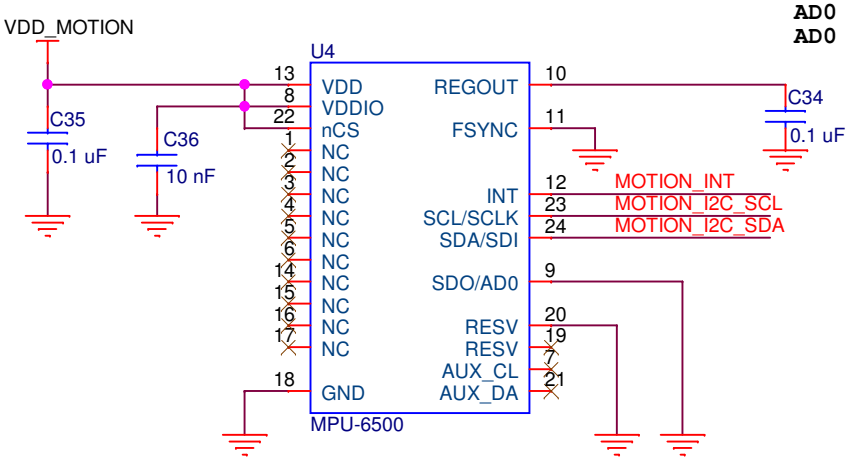

Refer datasheet for rating of caps

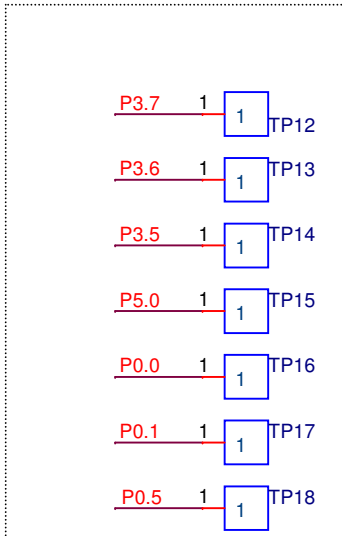

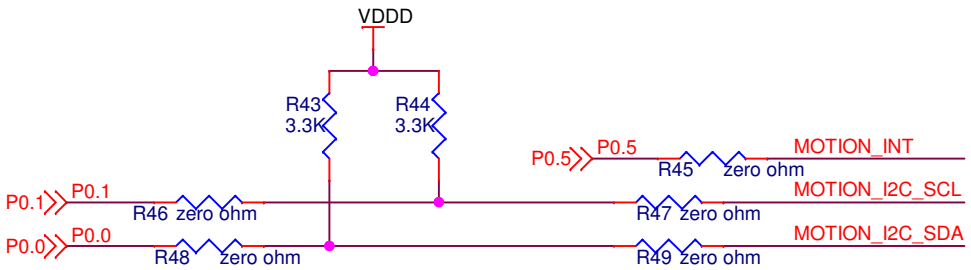

CYPRESS SEMICONDUCTOR © 2014		
Title: CY5672 Remote Control RDK		
Size: A	Document Number: 630-60199-01	Rev: 2.1
Date: Tuesday, December 09, 2014	Sheet 5 of 6	

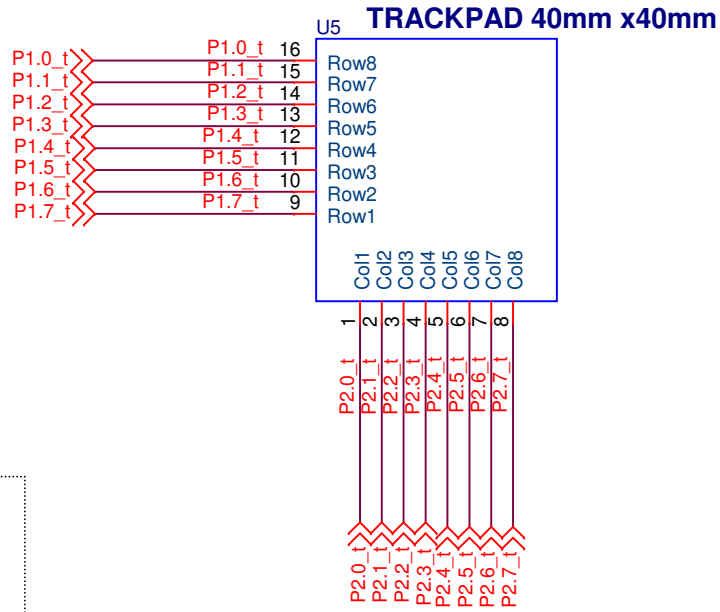

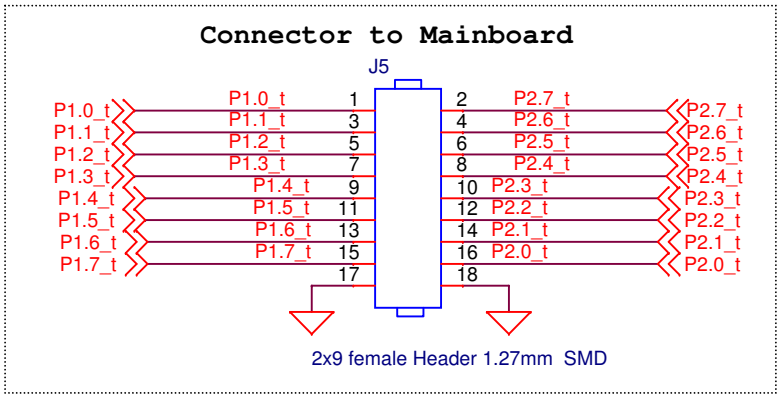

CYPRESS SEMICONDUCTOR © 2014		
Title: TRACKPAD		
Size: A	Document Number: --	Rev: 1.0
Date: Monday, December 29, 2014	Sheet 6 of 6	